TOSHIBA Bipolar Linear Integrated Circuit Silicon Monolithic

TA7628P,TA7628HP

Amplifier System for Cassette Tape Recorder

TA7628P and TA7628HP are Pre + Power amplifier system designed for cassette tape recorder.

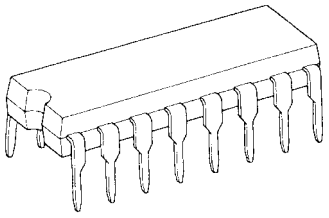

Weight: 1.00 g (typ.)

Features

- Recording playback for pre amplifier
- Buffer amplifier (recording amplifier)
- Power amplifier
- ALC detector circuit
- Muting circuit
- Maximum output power (V_{CC} = 6 V, f = 1 kHz, THD = 10%)
  : P_{out} = 0.6 W (typ.) (R_L = 8 Ω) : TA7628P
  : P_{out} = 0.96 W (typ.) (R_L = 4 Ω) : TA7628HP
- Low distortion and wide dynamic range
- Without turn-on "POP" for muting circuit
- Operating supply voltage range: $V_{CC\ (opr)}$ = 3.5~9 V (Ta = 25°C)

Block Diagram

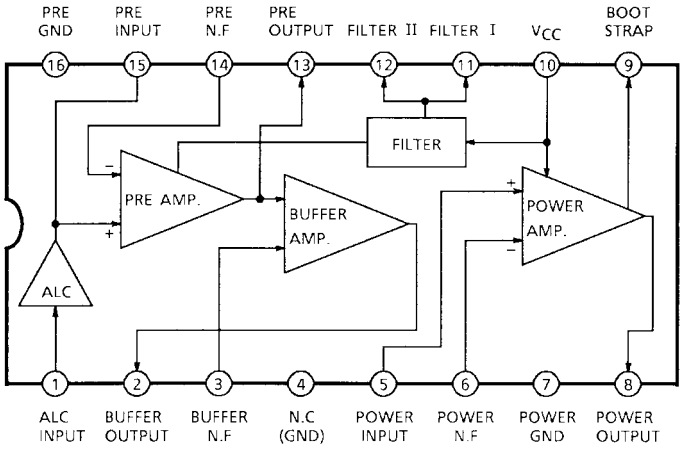

Switch Over

Test Item	SW_1	SW_2	SW_3	SW_4	SW_5	SW_6
G_{vo1}	1	1	ON	OFF	OFF	OFF
G_{v1}	1	1	OFF	OFF	OFF	OFF
V_{out1}	1	1	OFF	OFF	OFF	OFF
G_{v2}	1	3	OFF	OFF	OFF	OFF
V_{out2}	1	3	OFF	OFF	OFF	OFF
V_{no2}	1	3	OFF	OFF	ON	OFF
ALC	1	2	OFF	OFF	OFF	OFF
G_{vo3}	2	1	OFF	ON	OFF	OFF
G_{v3}	2	1	OFF	OFF	OFF	OFF
P_{out}	2	1	OFF	OFF	OFF	OFF
V_{no3}	2	1	OFF	OFF	OFF	ON

Precaution for Use

1. Precaution of GND line

The GND points of input side GND and N.F side GND in each amplifier must be arranged at the preamplifier side. (Figure 1)
The input side GND point and the N.F side GND point must be arranged near each other to have no impedance.

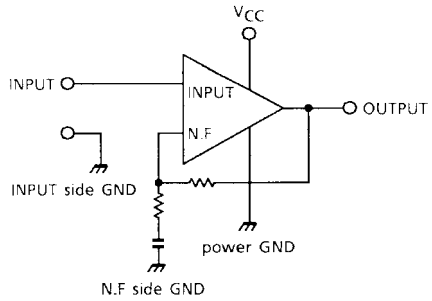

Figure 1

2. About radiation

(1) The capacitance between the output and GND in preamplifier, buffer amplifier and power amplifier must be arranged near to this IC. The radiation loop must be as small as possible.
(2) The voltage gain of high frequency in each amplifier must be reduced to reduce the noise with high frequency component. (In the application circuit, the feed back capacitor is used)
A 1000 pF or same order capacitor must be connected from the input terminal of preamplifier and power amplifier to GND to prevent the interference of radiation.
(3) It is better for this IC to separate adequately from the antenna in the radio cassette tape recorder applications.
(4) The electrolytic capacitance 100 µF~220 µF between V_{CC} and GND must be arranged near to this IC.

3. To prevent the oscillation

(1) The output terminal of preamplifier must be terminated to GND by the capacitance more than 5600 pF. (The recommended value: C = 0.01 µF)
(2) The output terminal of buffer amplifier must be terminated to GND by the capacitance more than 0.01 µF. (The recommended value: C = 0.01 µF)
(3) The output terminal of power amplifier must be terminated to GND by the good temperature characteristic capacitance of 1~2.2 µF. The bootstrap terminal must be terminated to GND with the capacitance more than 0.47 µF.

4. Precaution of preamplifier

(1) It is better that the coupling capacitor between the volume and the output of preamplifier is small. Recommended value: C = 0.47 μF

(2) In recording mode, the signal source resistance must be more than 1 kΩ for ALC (Automatic Level Control) operation. When this resistance is small, the ALC range becomes narrow.

5. Buffer amplifier

When the output signal is clipped in the buffer amplifier, this signal returns to preamplifier and influences to make THD bad.
To prevent this, in playback mode, the buffer amplifier is recommended to be cut-off by terminating the output terminal to GND directly or by terminating the feedback terminal to GND through 330 Ω or less than this shown in Figure 2.

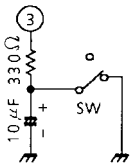

Figure 2

6. Power amplifier

(1) In case of the battery use ($V_{CC} \leq 6$ V), this IC is happen to oscillate (blocking oscillation) when the impedance of power supply is high.
In this case, it is recommended to insert the resistance R_A of 500 Ω~1 kΩ between pin 10 and pin 12 (V_{CC}~Filter II). By this method, this IC becomes very stable. But the output DC voltage is not center by the influence of R_A. Then the output wave shape is not symmetrical clipping wave and the maximum output voltage is reduced. So we recommend to insert the other resistance R_B between pin 6 and pin 8 for compensating the output DC voltage.

(2) When you use this IC at the supply voltage of more than 6 V, it is better to insert the resistance R_B for compensating output DC voltage. (Figure 3)

The recommended value: $\begin{cases} R_B = 220\ k\Omega \text{ at } V_{CC} = 7.5\ V \\ R_B = 150\ k\Omega \text{ at } V_{CC} = 9\ V \end{cases}$

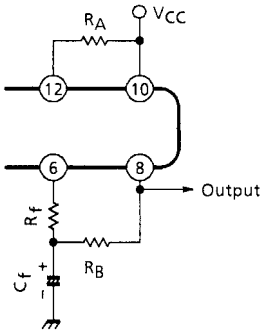

Figure 3

(3) The output coupling capacitance and bootstrap capacitance is better to be large because of getting the maximum output power.

(4) On the PC board, the interval between V_{CC} and GND is better to be large.

Maximum Ratings (Ta = 25°C)

Characteristics		Symbol	Rating	Unit
Supply voltage	TA7628P	V_{CC}	9	V
	TA7628HP		12	
Output current	TA7628P	$I_{O\ (peak)}$	0.56	A
	TA7628HP		1.5	
Power dissipation	TA7628P	P_D (Note)	750	mW
	TA7628HP		1200	
Operating temperature		T_{opr}	−20~75	°C
Storage temperature		T_{stg}	−55~150	°C

Note: Derated above Ta = 25°C in the proportion, 6.0 mW/°C for TA7628P, 9.6 mW/°C for TA7628HP.

Electrical Characteristics (TA7628P) (unless otherwise specified, V_{CC} = 6 V, f = 1 kHz, Ta = 25°C)

Total

Characteristics	Symbol	Test Circuit	Test Condition	Min	Typ.	Max	Unit
Quiescent current	$I_{CCQ\ (1)}$	—	V_{CC} = 3.5 V	7	—	—	mA
Quiescent current	$I_{CCQ\ (2)}$	—	V_{CC} = 6 V	9	—	36	mA

Pre amp.

Characteristics	Symbol	Test Circuit	Test Condition	Min	Typ.	Max	Unit
Open loop voltage gain	G_{vo1}	—	—	55	70	—	dB
Closed loop voltage gain	G_{v1}	—	—	—	40	—	dB
Maximum output voltage	V_{out1}	—	THD = 1%	—	0.7	—	Vrms
Input resistance	R_{IN1}	—	—	24	30	—	kΩ
Equivalent input noise voltage	V_{ni}	—	R_g = 0	—	1.4	2.5	μVrms

Pre amp. + Buffer amp.

Characteristics	Symbol	Test Circuit	Test Condition	Min	Typ.	Max	Unit
Closed loop voltage gain	G_{v2}	—	Pre amp. G_v = 40dB Buffer amp. G_v = 20dB	—	60	—	dB
Maximum output voltage	V_{out2}	—	THD = 3%	1.5	1.7	—	Vrms
Output noise voltage	V_{no2}	—	R_g = 0, G_{v2} = 60dB	—	1.2	2.5	mVrms
ALC effect	ALC1	—	V_{in} = 0.775 mVrms (−60dBm) ~0.0775 Vrms (−20dBm)	—	2	—	dB
ALC range	ALC2	—	Range of THD ≤ 1%	—	60	—	dB

Power amp.

Characteristics	Symbol	Test Circuit	Test Condition	Min	Typ.	Max	Unit
Open loop voltage gain	G_{vo3}	—	—	60	70	—	dB
Closed loop voltage gain	G_{v3}	—	—	—	40	—	dB
Output power	P_{out}	—	R_L = 8 Ω, THD = 10%	0.5	0.6	—	W
Output noise voltage	V_{no3}	—	R_g = 0, G_v = 40dB	—	0.3	1.0	mVrms

Electrical Characteristics (TA7628HP) (unless otherwise specified, V_{CC} = 6 V, f = 1 kHz, Ta = 25°C)

Total

Characteristics	Symbol	Test Circuit	Test Condition	Min	Typ.	Max	Unit
Quiescent current	$I_{CCQ\ (1)}$	—	V_{CC} = 3.5 V	7.5	—	—	mA
Quiescent current	$I_{CCQ\ (2)}$	—	V_{CC} = 6 V	11	—	35	mA

Pre amp.

Characteristics	Symbol	Test Circuit	Test Condition	Min	Typ.	Max	Unit
Open loop voltage gain	G_{vo1}	—	—	55	70	—	dB
Closed loop voltage gain	G_{v1}	—	—	—	40	—	dB
Maximum output voltage	V_{out1}	—	THD = 1%	—	0.7	—	Vrms
Input resistance	R_{IN1}	—	—	—	30	—	kΩ
Equivalent input noise voltage	V_{ni}	—	R_g = 0	—	1.4	2.5	μVrms

Pre amp. + Buffer amp.

Characteristics	Symbol	Test Circuit	Test Condition	Min	Typ.	Max	Unit
Closed loop voltage gain	G_{v2}	—	Pre amp G_v = 40dB Buffer amp. G_v = 20dB	—	60	—	dB
Maximum output voltage	V_{out2}	—	THD = 3%	1.5	1.7	—	Vrms
Output noise voltage	V_{no2}	—	R_g = 0, G_{v2} = 60dB	—	1.2	2.5	mVrms
ALC effect	ALC1	—	V_{in} = 0.775 mVrms (−60dBm) ~0.0775 Vrms (−20dBm)	—	2	—	dB
ALC range	ALC2	—	Range of THD ≤ 1%	—	60	—	dB

Power amp.

Characteristics	Symbol	Test Circuit	Test Condition	Min	Typ.	Max	Unit
Open loop voltage gain	G_{vo3}	—	—	60	70	—	dB
Closed loop voltage gain	G_{v3}	—	—	—	40	—	dB
Output power	P_{out}	—	R_L = 4 Ω, THD = 10%	0.8	0.96	—	W
			V_{CC} = 9 V, R_L = 8 Ω, THD = 10%	—	1.4	—	
Output noise voltage	V_{no3}	—	R_g = 0, G_v = 40dB	—	0.3	1.0	mVrms

Test Circuit

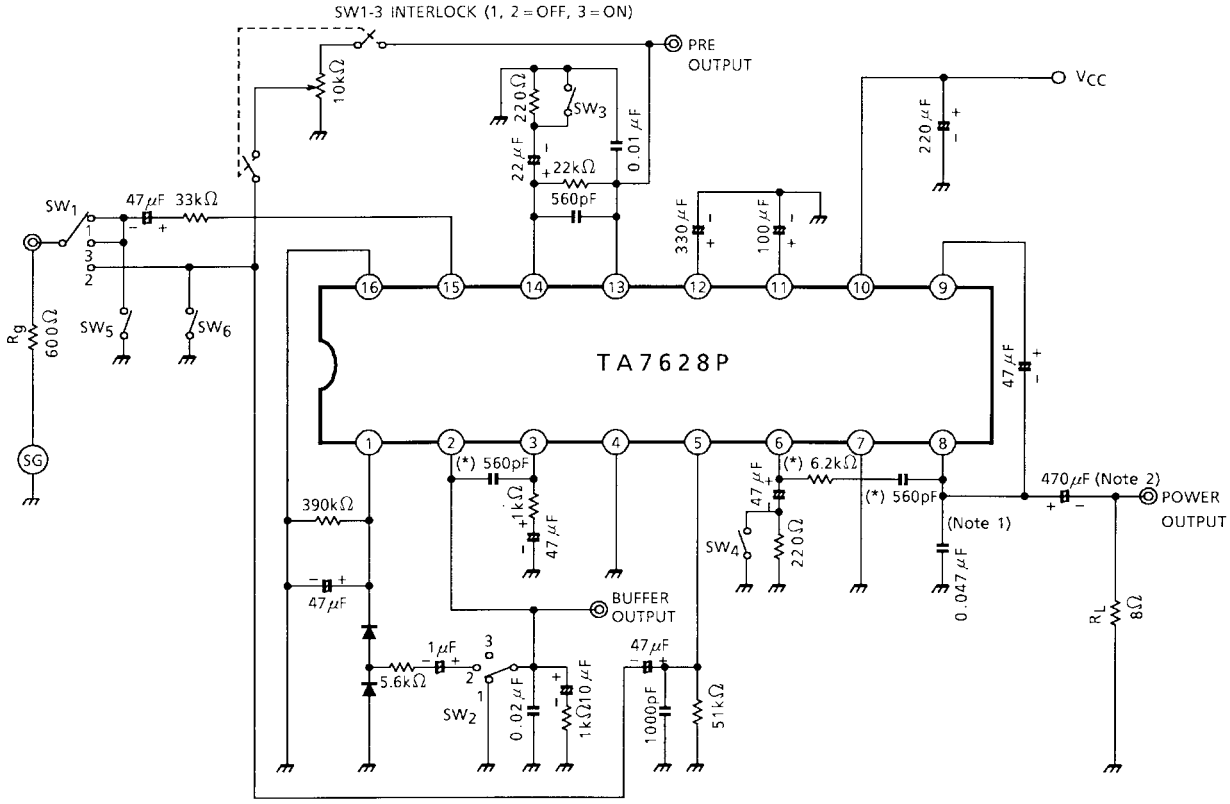

*: Use in measuring the output noise voltage.

Note 1: TA7628HP: 0.047 μF → 0.068 μF

Note 2: TA7628HP: 470 μF → 1000 μF

V_8, I_{CCQ} — V_{CC}

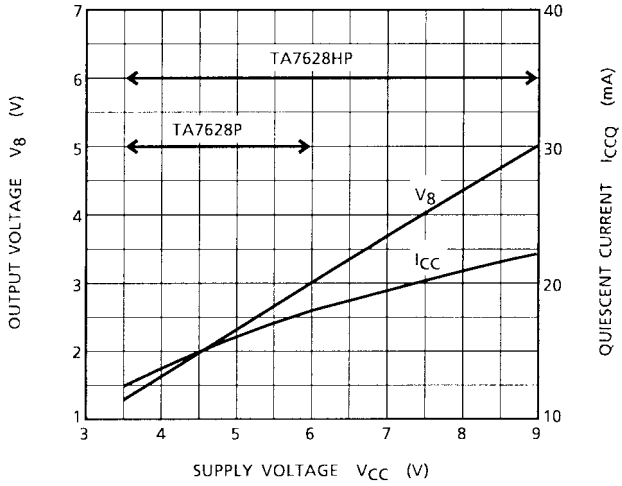

THD — V_{out}

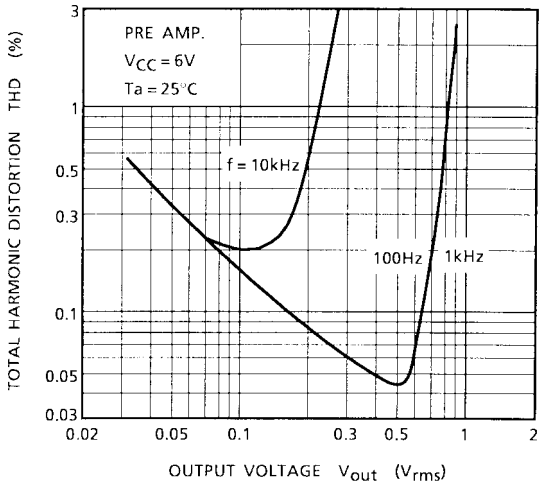

V_8, I_{CCQ} — Ta

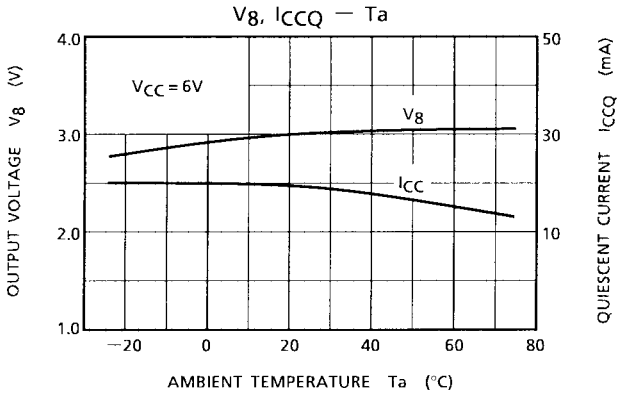

G_{VO}, G_V — f

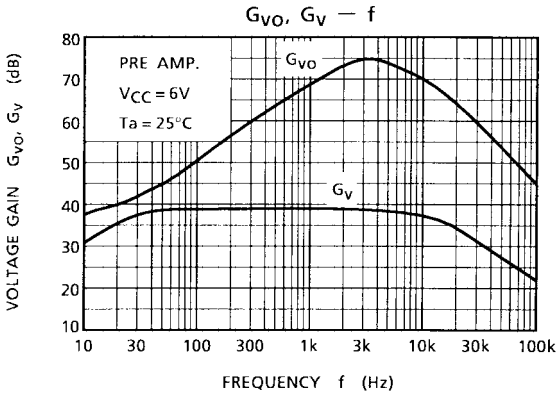

V_{out}, THD — V_{in}

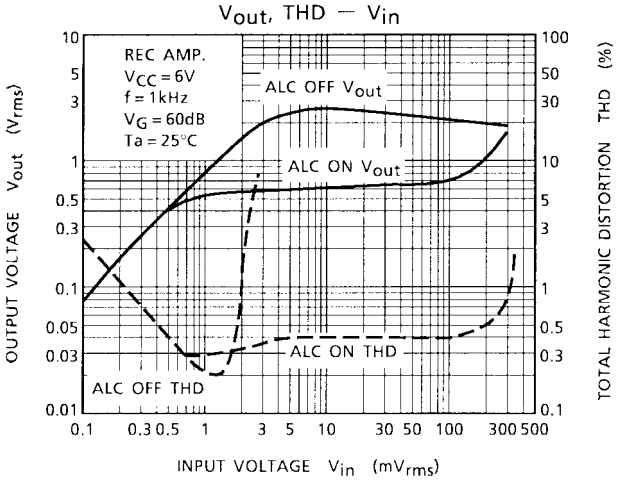

G_V — f

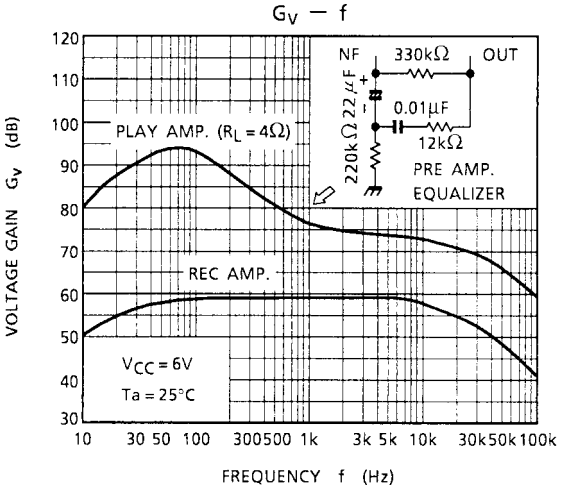

G_{vo}, G_v — f

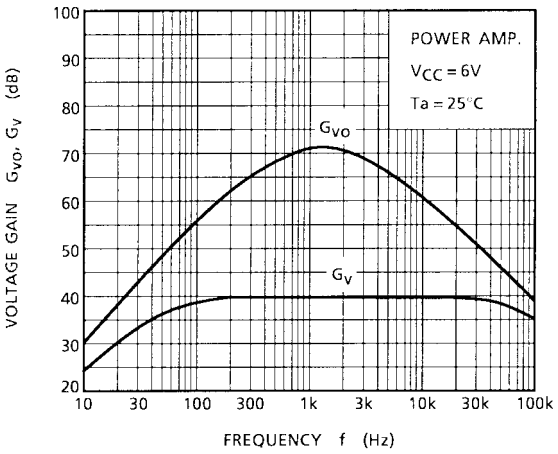

THD — P_{out} (TA7628HP)

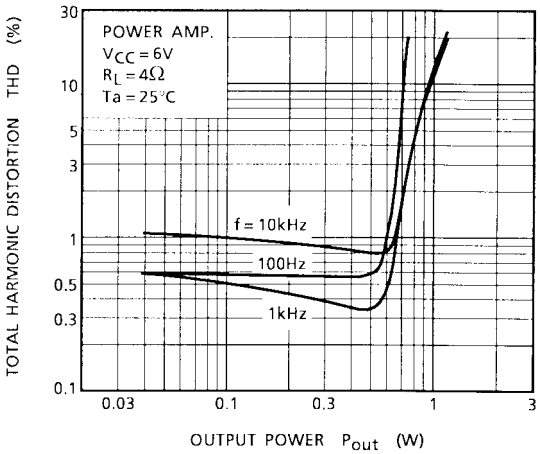

THD — P_{out}

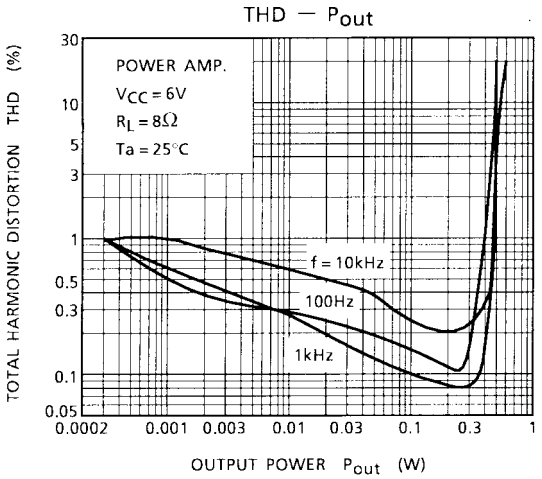

THD — P_{out} (TA7628HP)

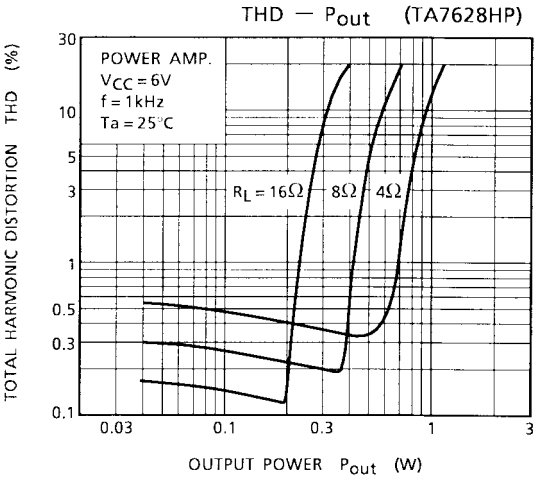

THD — P_{out} (TA7628HP)

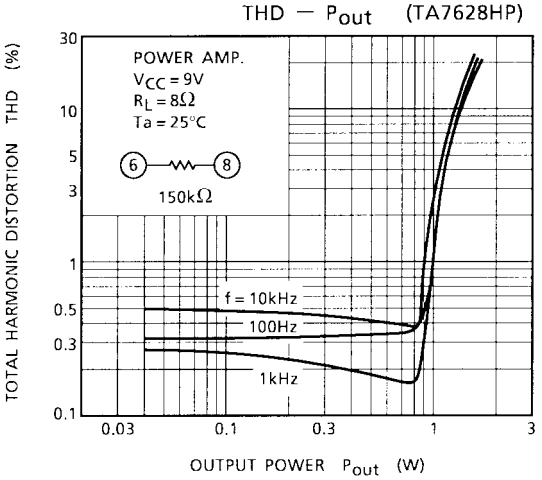

P_{out} — V_{CC}

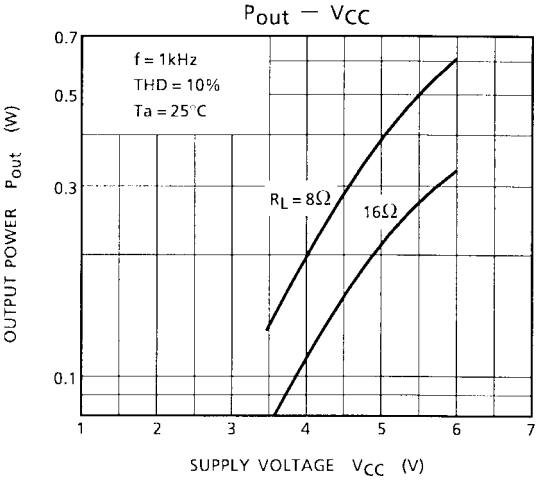

P_{out} – V_{CC} (TA7628HP)

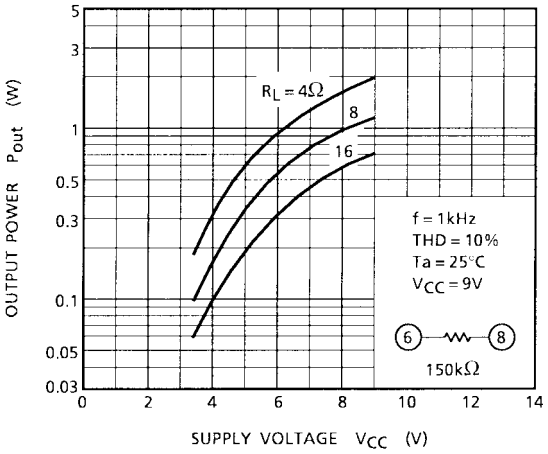

P_D – V_{CC}

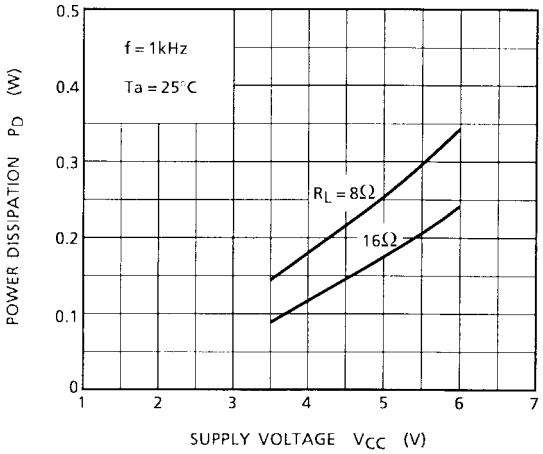

P_D – V_{CC} (TA7628HP)

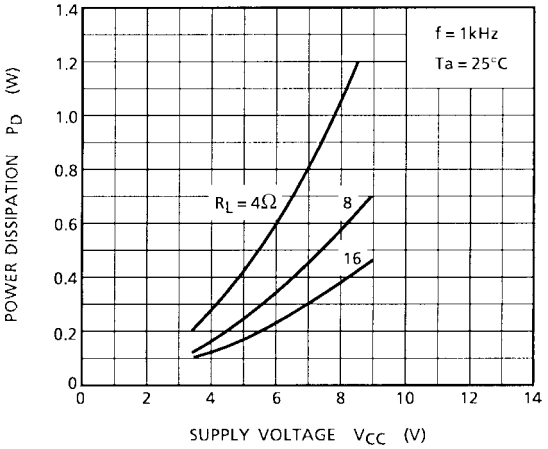

P_D – Ta

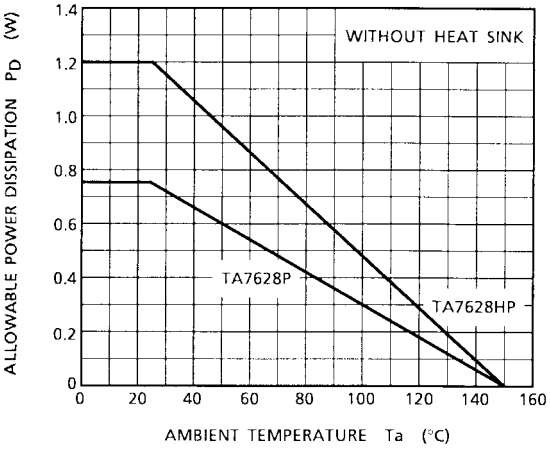

Application Circuit

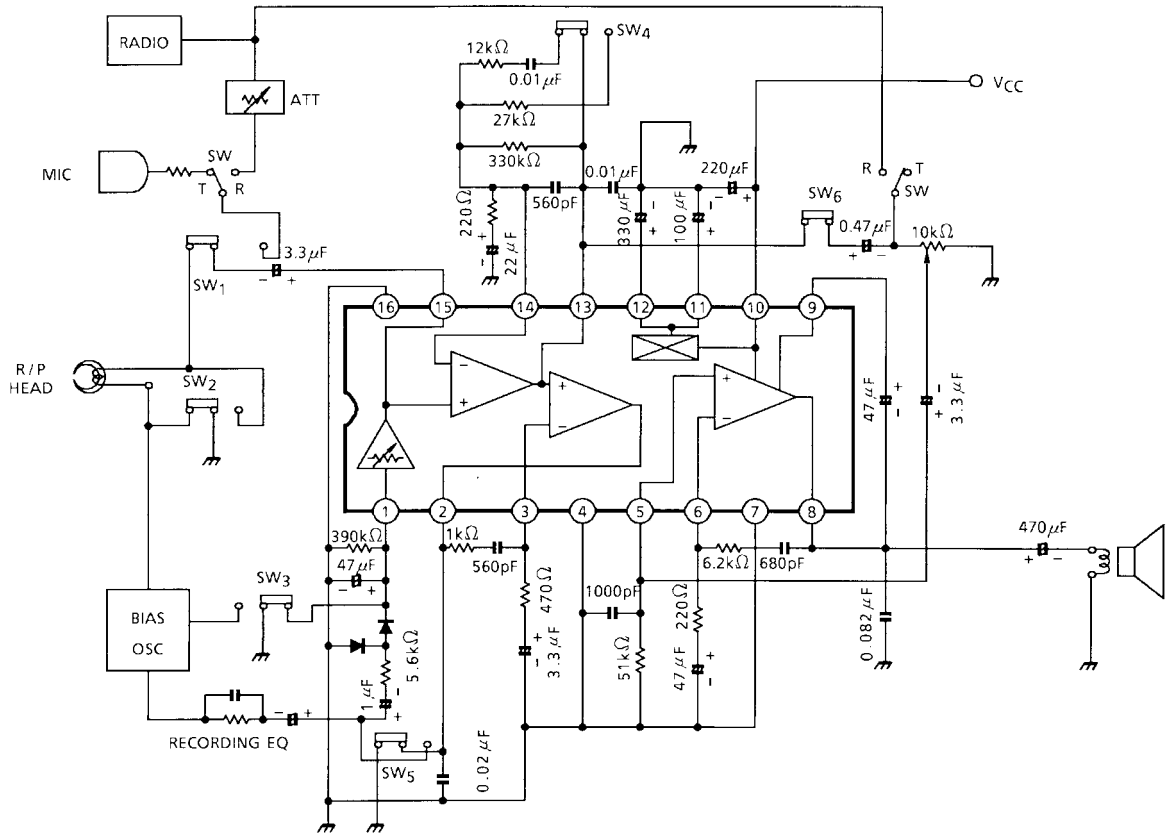

SW_1~SW_6 are set for play back.

SW Functions.

Package Dimensions

DIP16-P-300-2.54A Unit : mm

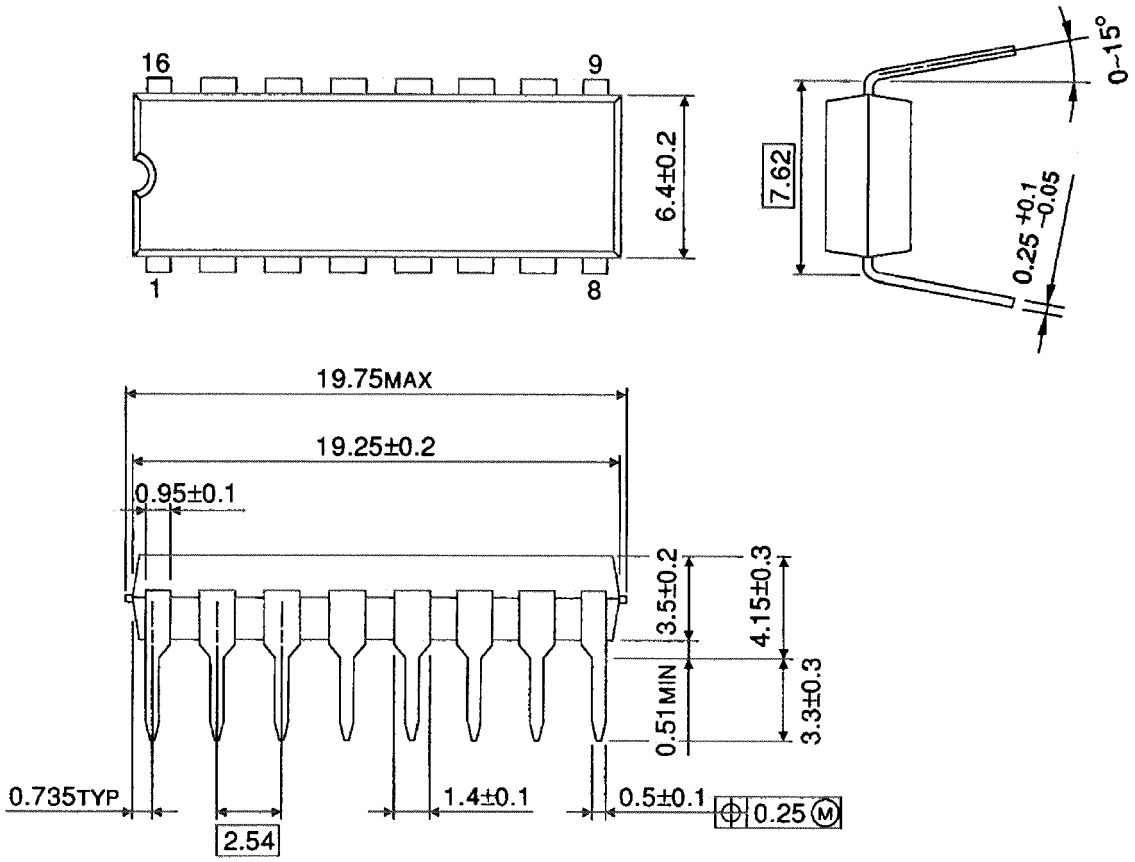

Weight: 1.00 g (typ.)

RESTRICTIONS ON PRODUCT USE

000707EBA

- TOSHIBA is continually working to improve the quality and reliability of its products. Nevertheless, semiconductor devices in general can malfunction or fail due to their inherent electrical sensitivity and vulnerability to physical stress. It is the responsibility of the buyer, when utilizing TOSHIBA products, to comply with the standards of safety in making a safe design for the entire system, and to avoid situations in which a malfunction or failure of such TOSHIBA products could cause loss of human life, bodily injury or damage to property.
  In developing your designs, please ensure that TOSHIBA products are used within specified operating ranges as set forth in the most recent TOSHIBA products specifications. Also, please keep in mind the precautions and conditions set forth in the “Handling Guide for Semiconductor Devices,” or “TOSHIBA Semiconductor Reliability Handbook” etc..
- The TOSHIBA products listed in this document are intended for usage in general electronics applications (computer, personal equipment, office equipment, measuring equipment, industrial robotics, domestic appliances, etc.). These TOSHIBA products are neither intended nor warranted for usage in equipment that requires extraordinarily high quality and/or reliability or a malfunction or failure of which may cause loss of human life or bodily injury (“Unintended Usage”). Unintended Usage include atomic energy control instruments, airplane or spaceship instruments, transportation instruments, traffic signal instruments, combustion control instruments, medical instruments, all types of safety devices, etc.. Unintended Usage of TOSHIBA products listed in this document shall be made at the customer’s own risk.
- The products described in this document are subject to the foreign exchange and foreign trade laws.
- The information contained herein is presented only as a guide for the applications of our products. No responsibility is assumed by TOSHIBA CORPORATION for any infringements of intellectual property or other rights of the third parties which may result from its use. No license is granted by implication or otherwise under any intellectual property or other rights of TOSHIBA CORPORATION or others.
- The information contained herein is subject to change without notice.

This datasheet has been download from:

www.datasheetcatalog.com

Datasheets for electronics components.